NPFSR-K122YAMD

Input: E-STOP, Safety gate
Output: 2NO, non-delay + 2NO, d-delay

Functional Block Diagram

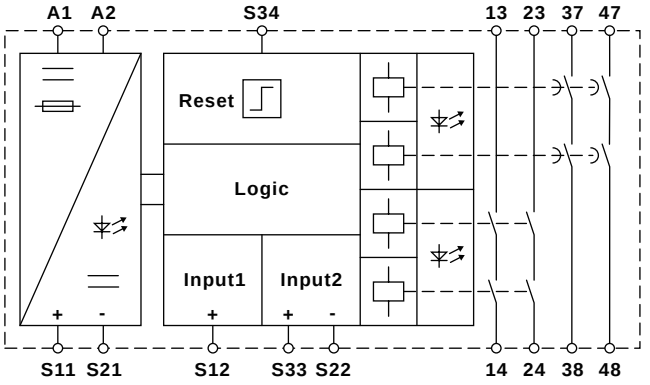

Performance level	PLe, according to ISO 13849[1)] PLd, according to ISO 13849[2)]
Category	Cat.4328.4414 Tm(PLd, according to ISO 13849)Tj4.772671 318.2725
PTI (T_M)	
DC_{avg}	
$MTTF_D$	
CCF	
SIL	
SIL CL	
HFT	
SFF	
PFD_{avg}/PTI = 20 years	
PFH	
Stop Category	