NPFSR-K122AMD

ڑ ٶ χ Ό ӯ ˜ Y ت Ḡ ٶ ڑ SQSḠ ٶ ж Ẇ
ڑ ˛ χ 2NO+2NC

˙H v ˝Ọ

ɨ ḧ ɔ я	24V AC/DC
ɔ я ķ Ţ	0.85 ~ 1.1
ſ Ш ļ '	50Hz ~ 60Hz
˝Ọ ı ắ	≤ 2.2W/24V DC, ≤ 5.4VA/24V AC
ڑ ٶ ɔ Ш	≤ 50mA/24V DC
Ṁ ɻ ɔ ڰ	≤ 15Ω
ڑ ٶ ֆ ᵻ	PNP
ԝ ᵖ ˝Ọ ˛	2NO+2NC
ԝ ᵖ ɻ ʒ	
ԝ ᵖ ɑ	$AgSnO_2$+0.2μmAu
ԝ ᵖ ķ ˛	AC-15: 5A/230V, DC-13: 5A/24V
ԝ ᵖ Ɍ ѡ Ȝ ĭ	10A gL/gG(NO), 6A gL/gG(NC)
ᵀ ˙H ڑ	: ≤ 300ms, : ≤ 150ms
˛ ֆ ˙H ڑ	: ≤ 30ms, : ≤ 100ms
Õ ʰ ˙H ڑ	: ≤ 30ms, : ≤ 100ms
ɔ ◊ ˜ ˙H ѧ Ă	20ms
ɔ ˙ Ո ķ	IEC/EN 60947, IEC 61326-3-1, IEC/EN 61000-6-2, IEC/EN 61000-6-4
ɨ ḧ Ν ɻ ɔ я	250V AC
ɨ ḧ ˙ ` ắ ᵖ ɔ я	6000V(1.2/50us)
Ν ɻ Ặ ẙ	1500V AC, 1 min
ɔ ↔ ڑ ƙ ᵓ ķ ɔ ' ˜	IEC 60947-1
ʊ	10Hz ~ 55Hz, 0.35mm
ص я ч ſ	III
⁄ ... ч ſ	2
گ ĭ ч ſ	IP20
Ṫ Ă □ ẙ	-20°C ~ +60°C
Ч è □ ẙ	-40°C ~ +80°C
∓ ö ઋ ẙ	≤ 2000 m
₄ ṁ ᵘ	10×10^6 cycles

ı Ť↑ g„

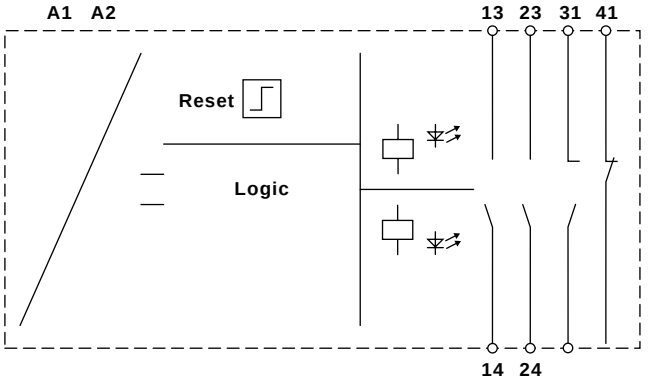

Ḡ ٶ v ˝Ọ

ό Ť ч ſ	PLe, ISO 13849
Ḡ ٶ ɻ ˛	Cat.4, ISO 13849
ɣ ת ˙H ڑ	20 , ISO 13849
Ẉ ƺ ⅞ Ă ԉ ˜ '	99%, ISO 13849
Ẉ ƺ и ɔ ˛ ѽ ˙H ڑ	164 , ISO 13849
Hʊ ɨ ˛ ѽ	68, ISO 13849
Ḡ ٶ Ḣ ˝Ọ ό ч ſ	SIL3, IEC 61508
ф ˝ Ḡ ٶ Ḣ ˝Ọ ό ч ſ	SIL CL3, IEC 62061
. ţ ѽ Ƙ ẙ	1, IEC 62061
Ḡ ٶ ˛ ѽ ˋ ˝Ọ	≥ 99%, IEC 62061
ļ ∂ ˙H и ɔ ˛ ѽ ₦ '	1.29×10^{-5}/PTI=20 IEC 62061
⅛ ŋ ˙H и ɔ ˛ ѽ ₦ '	1.49×10^{-10} 1/h, IEC 62061
ӯ ₿ ɻ ˛	0, IEC 60204